Advanced Research in Electrical and Electronic Engineering
Print ISSN: 2349-5804; Online ISSN: 2349-5812 Volume 1, Number 2 (2014) pp. 48-55
© Krishi Sanskriti Publications
http://www.krishisanskriti.org/areee.html

Cascaded H Bridge Multilevel Inverter Booster As A Dynamic Voltage Restorer

Rashmi M.R.[1], Nirupama P.K.[2]

[1]*Department of EEE, Amrita School of Engineering, Bengaluru, India*
[2]*Student, Department of EEE, Amrita School of Engineering, Bengaluru, India*

Abstract: **Power quality is one of the major concerns of the present era. One of the main power quality issues is the voltage sag during power transmission. To solve this problem custom power devices have been introduced. One of these devices is the Dynamic Voltage Restorer (DVR), which is considered to be the most efficient and effective modern custom power device used in power distribution network. Its advantages include fast dynamic response, large variation in the type of sags to be mitigated and variation in the type of the connected load. A dynamic Voltage Restorer basic configuration consists of an energy storage cell, a voltage source inverter, filter and a step up voltage injection transformer to boost the magnitude of voltage during voltage sag conditions. In this paper a novel configuration of cascaded h bridge multilevel inverter which uses reduced number of power semiconductor switches is realized as a dynamic voltage restorer during an event of voltage sag.**

Keywords: **Power quality; Multilevel Inverter (MLI); Dynamic Voltage Restorer (DVR)**

1. INTRODUCTION

The modern devices used in power distribution networks are mainly based on power electronics. These electronic devices are very sensitive to disturbances and are often prone to power quality issues like voltage sag, voltage swell, interruptions and harmonics. The major requirement of any distribution network is to maintain the load side voltage constant. However due to the mentioned power quality issues the load side voltage is not constant.

A DVR is a custom power device used for compensating such power quality issues [2]. The DVR is connected in series with the distribution network by means of a coupling transformer. Hence a DVR is a series compensator whose basic principle is to insert a voltage of required magnitude and frequency so as to maintain the load side voltage constant. Many experiments and researches have been done with DVR. However for higher voltage applications a multilevel inverter is a much better option[3]

A multilevel inverter is a power electronic device which generates a desired AC voltage from several levels of DC voltages[2]. Multilevel inverters have got many advantages as they can develop very high voltages as well as high power without involving transformers and dynamic voltage balancing circuits. The three major categories of a multilevel inverter as far as topology is concerned are the NPC (Neutral Point Clamped), CHB(Cascaded H Bridge) and FC(Flying Capacitor) multilevel inverters. Out of the three topologies of a multilevel inverter it is found that the CHB topology uses lesser number of semiconductor devices for generating the desired level of voltage when compared to the other two topologies[3]. When the number of semiconductor devices decreases the switching losses also decrease in direct proportion and therefore the efficiency of the entire system increases. For this reason a CHB multilevel inverter can be considered as an effective option for realization as a DVR.

Many experiments have been carried out to realize a multilevel inverter as a DVR and most of them have been done using conventional 5 level inverters[4-8]. If a higher level of multilevel inverter can be used to serve the same purpose then the results could be more attractive in terms of voltage profile and reduction in harmonics. However use of higher level multilevel inverters may impose other problems such as higher number of switching devices, cost complexity etc.

In this paper a novel topology of 11 level multilevel inverter with reduced number of switching components and hence reduced complexity is simulated and realized as DVR to mitigate voltage sag. It highlights the use of a higher level multilevel inverter as a series filter with simple compensating techniques.

2. DYNAMIC VOLTAGE RESTORER(DVR)

With the use of power electronic devices in the field of distribution network, the supply voltage is not constant by the time it reaches the load end. Such a phenomenon constitutes the major power quality issues as voltage sag, voltage swell, faults etc.[6], [7]. Among the power quality issues the voltage sag is considered to be the worst which can cause severe damages to the equipments. A dynamic voltage restorer(DVR) is a custom power device used to overcome such problems as voltage sag, voltage swell, faults etc. It is a series compensator

which is connected in series at the point of common coupling [8].

The basic configuration of a DVR is as shown in figure 1. It consists of the following main parts such as an Injection transformer, Harmonic filter, Storage device, Voltage source inverter, DC charging circuit, Control and protection system. A multilevel inverter when used as DVR can provide several advantages when it comes to harmonics reduction, size reduction and efficiency. It enables the use of smaller harmonic filters and hence makes the series filter much compact. However the use of multilevel inverter may increase the number of the semiconducting devices which may increase the overall cost of the filter but the advantages that can be procured from such an arrangement can compensate for the increase in cost. As a whole the system becomes much efficient.

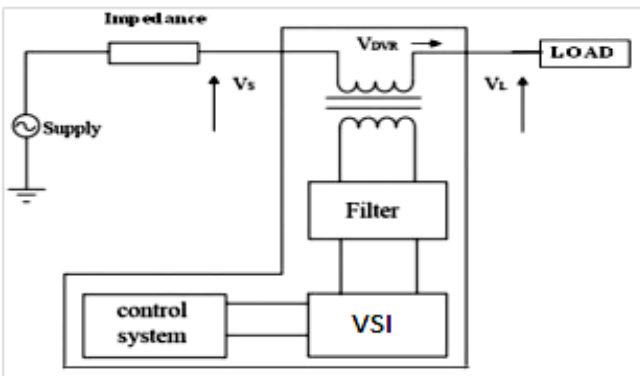

Figure 1.Basic block diagram of DVR

A Multilevel inverter is a power electronic device built to synthesize a desired A.C voltage from several levels of DC voltages[9]. Multilevel inverters have gained more attention in high power applications because it has got several advantages as they are capable of realizing higher voltages without much complexities. The fundamental idea of a multilevel inverter is to achieve high power by using a series of power semiconductor switches with several lower dc voltage sources to perform the power conversion by synthesizing a staircase voltage waveform [3] In this project an innovative topology of the cascaded-H-bridge multilevel inverter called the Cross switched multilevel Inverter[1] is realized as a DVR.

3. CROSS-SWITCHED MULTILEVEL INVERTER

The cross-switched topology is as shown in figure3. It is a CHB multilevel inverter which uses dc voltage sources and the switches are connected in a cross like manner. The following relations can be defined for the cross-switched multilevel inverter topology.

$$N_L = 2N_{DC} + 1 \ldots\ldots\ldots\ldots \quad (1)$$

$$N_S = 2(N_{DC} + 1) \ldots\ldots\ldots\ldots\ldots \quad (2)$$

Where N_L, N_S and N_{DC} are the number of voltage levels, semiconductor switches, and dc voltage sources respectively.

From (1) and (2), we can obtain the following relationship between N_L and N_S.

$$N_S = N_L + 1 \ldots\ldots\ldots\ldots . \quad (3)$$

Thus from (3) it is found that the number of switches for obtaining the desired number of levels in the output voltage is considerably less.

The gating pulses for the multilevel inverter is obtained by means of the fundamental frequency method. In this method of modulation control a sinusoidal wave is compared with a set dc values so as to obtain a sinusoidal staircase signal at the output. The fundamental frequency switching scheme is as shown in figure 2.

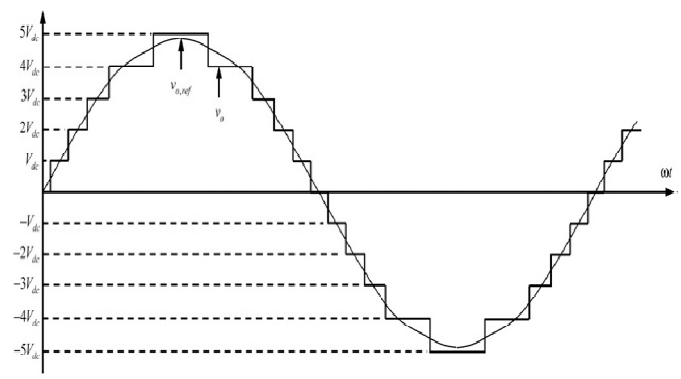

Figure 2. Fundamental Frequency Control Scheme for 11 level inverter

The cross-switched multilevel inverter circuit for obtaining 11 levels of output voltage is as shown in figure 3.

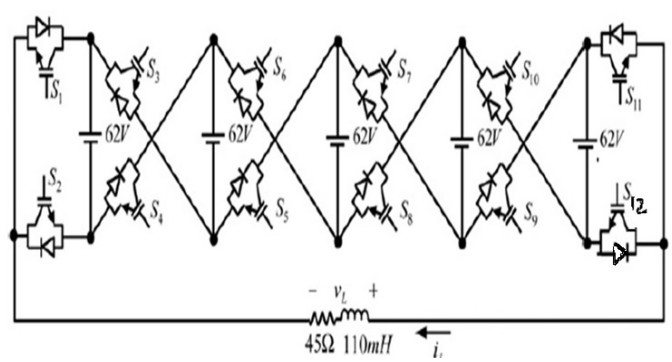

Figure 3.Single phase 11 levels Cross-Switched Multilevel Inverter

The switching sequence for the multilevel inverter switches so as to obtain the desired output voltage is represented in table1.

Table 1: Switching combinations of the 11-level inverter

Switching Combination	Voltage Level
S2, S4, S6, S8, S10, S12	0
S1, S3, S6, S8, S10, S12	62
S2, S3, S6, S8, S10, S12	124
S2, S3, S6, S7, S9, S11	186
S2, S3, S6, S7, S10, S11	310

From the table 1, it can be found that the switching sequences are designed in such a way that there is minimum number switching transition occurs when switching from one level to the next.

4. PROPOSED DVR CONFIGURATION

The proposed DVR configuration is as shown in figure 4.

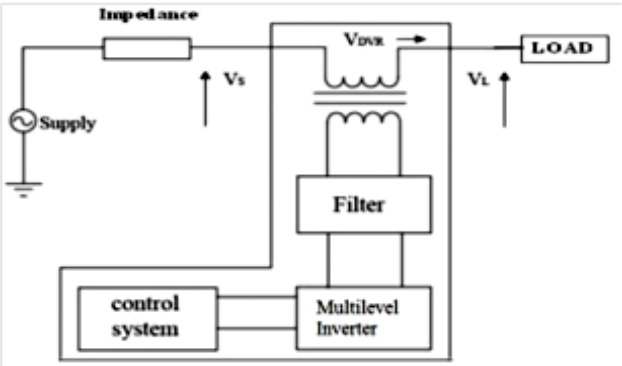

Figure 4. Proposed DVR Configuration

The Cross Switched multilevel inverter is a Cascaded H Bridge multilevel inverter in which the switches are connected in a cross like manner. This multilevel inverter is used for maintaining the load voltage constant at the time of a voltage sag.

A unique and simple compensation technique is proposed so as to mitigate voltage sags using the cross-switched multilevel inverter as a DVR. This algorithm can be represented by the following block diagram .shown in figure 6.

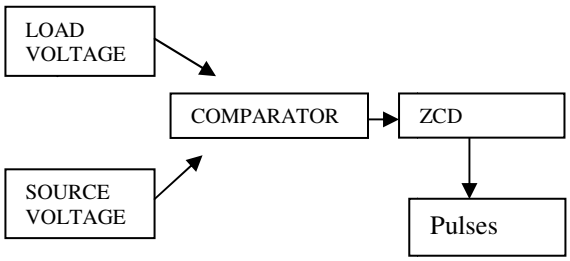

Figure 5.Block diagram of the algorithm

5. SIMULATION ANALYSIS AND RESULTS

The simulation is carried out for both single phase and three phase configuration of the Cross-switched topology and the three phase configuration is realized as a DVR to compensate voltage sag. The specifications for carrying out the simulation are given in table.2.

Table 2: Specifications for the simulation of power quality issues

Supply voltage	325V
Line inductance	0.5mH
Line resistance	0.1ohms
Load inductance	200mH
Load resistance	100ohms
Load capacitance	1.56µH

The simulink model for voltage sag is shown in figure 7. Here an extra inductive load is connected which results in a dip in the voltage thereby constituting voltage sag. Figure 6a shows the simulink model for voltage sag. Figure 6b shows the input voltage and figure 6c shows the output load voltage.

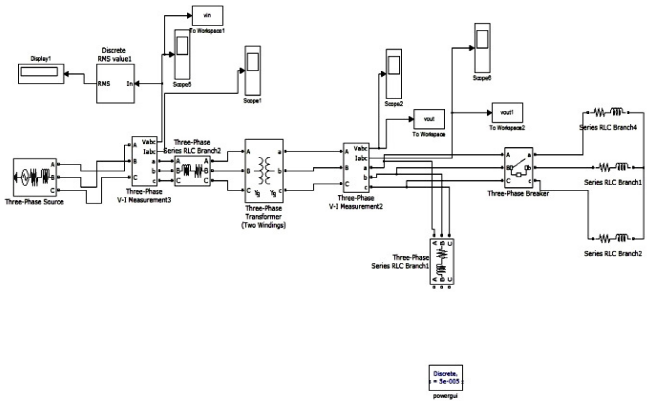

Figure 6a. Simulink model of voltage sag

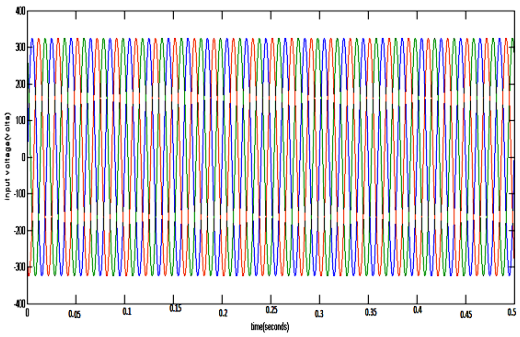

Figure 6b.Input Supply Voltage

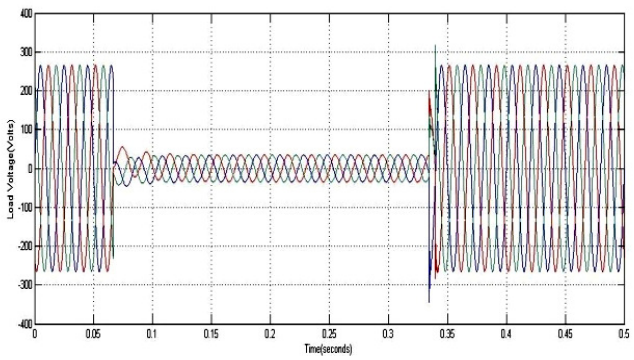

Figure 6c. Output load voltage

The simulink model of the Cross-Switched multilevel inverter is shown in figure 7. The multilevel inverter was simulated for 11 levels of the output voltage with 5 isolated dc sources of the same value which makes this topology a symmeterical topology. Figure 7a shows the simulink model of the single phase 11 levels Cross- Switched topology. Figure 7b. shows the single phase 11 levels output voltage. Figure 7c. shows the simulink model of the three phase 11 levels Cross- switched topology. Figure 7d shows the three phase 11 levels output voltage.

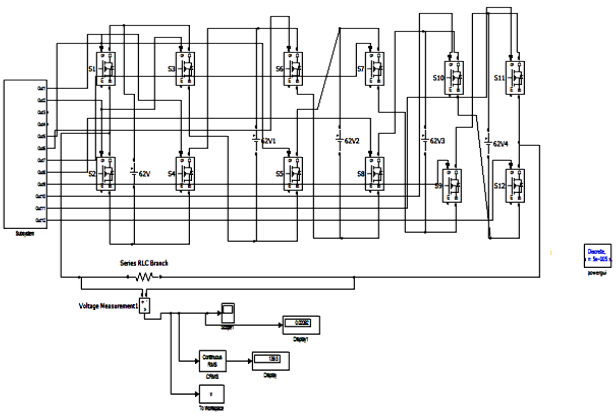

Figure 7a. Single phase 11 levels Cross-Switched MLI

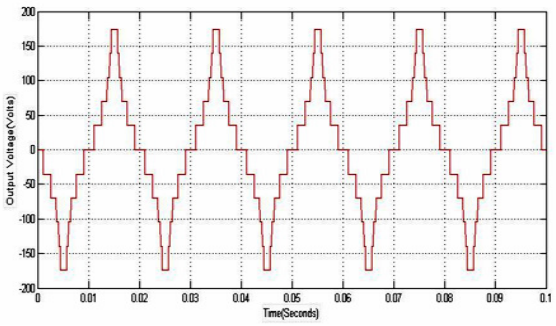

Figure 7b. Single phase 11 levels output voltage

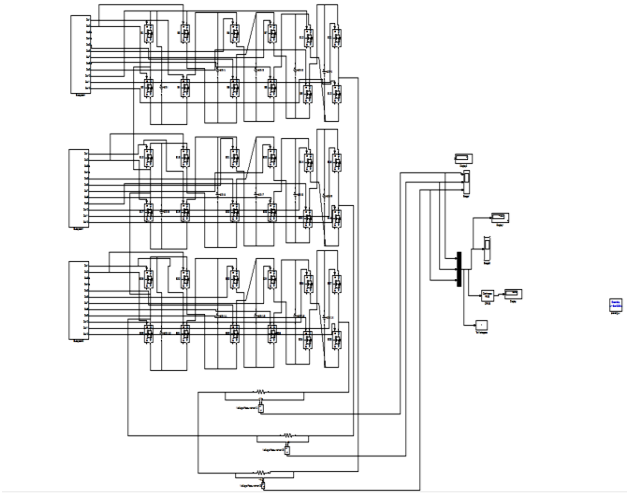

Figure 7c. Three phase 11 levels Cross-Switched MLI

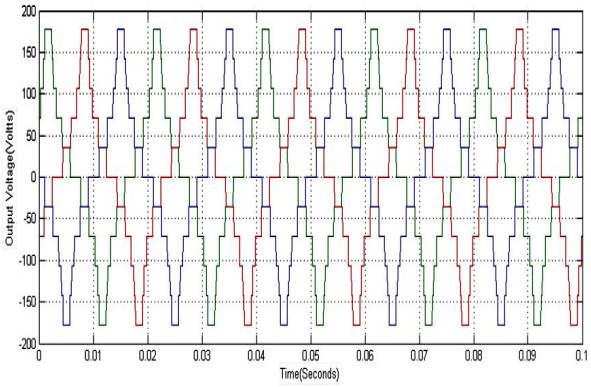

Figure 7d. Three phase 11 levels output voltage.

Figure 8a shows the simulink model of the compensation circuit. Figure 8b shows the output load voltage before compensation. Figure 8c. shows the output voltage after compensation.

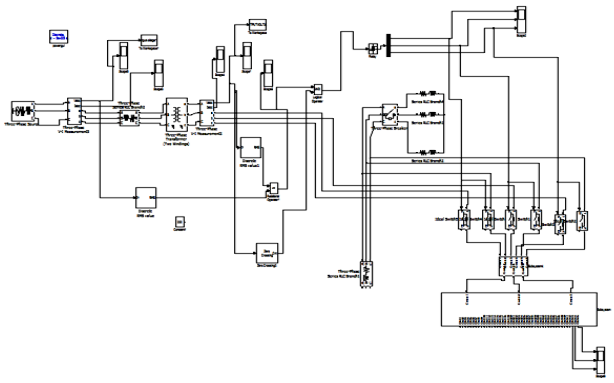

Figure 8a.Compensation circuit

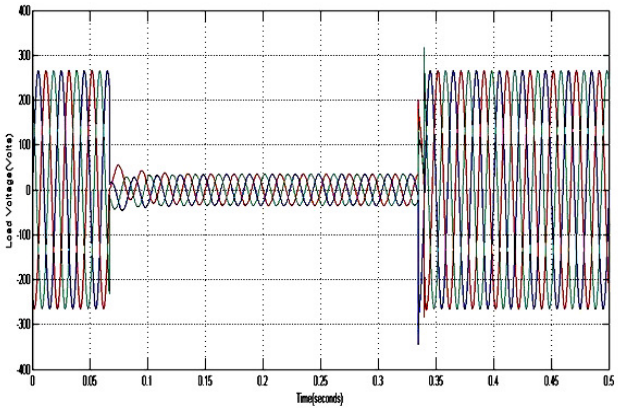

Figure 8b. Output load voltage before compensation.

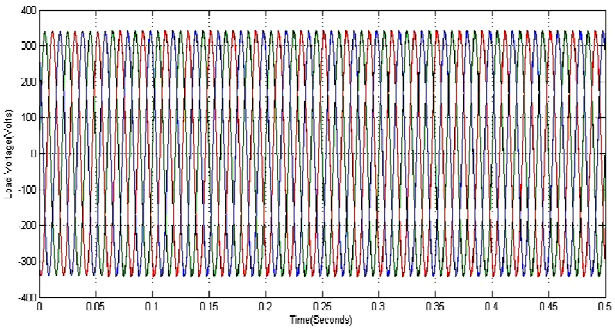

Figure 8c. Output load voltage after compensation.

From figure 9c it is observed that the voltage sag has been mitigated. Another method for the compensation of voltage sag is the open loop and closed loop injection of the multilevel inverter output. The closed loop operation was performed by means of a PI controller. The open loop circuit for mitigating voltage sag is as shown in figure10. Figure 10 shows the simulink model of the circuit for the open loop injection of the multilevel inverter voltage. Figure 10a shows the load voltage before injection of the multilevel inverter output. Figure 10b shows the load voltage after the injection of the multilevel inverter output.

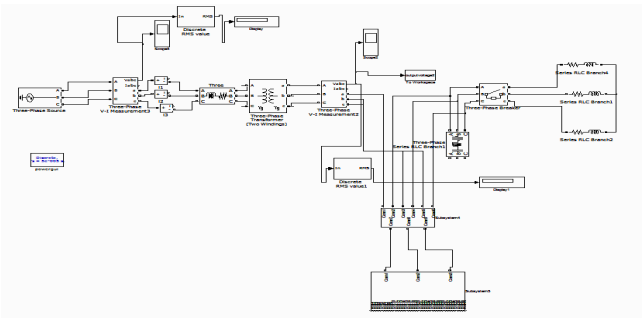

Figure 9 Open loop circuit for the mitigation of voltage sag

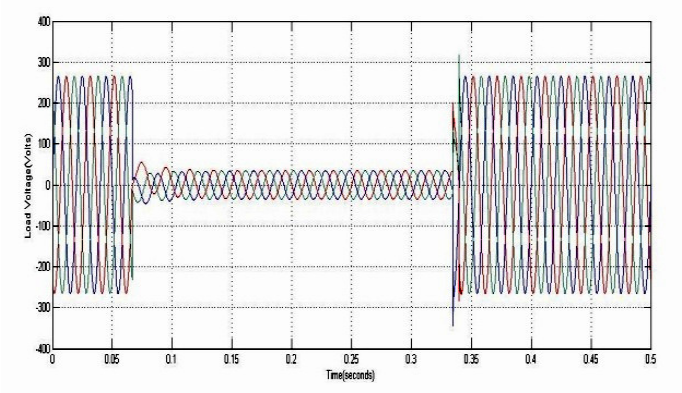

Figure 9a . Output load voltage before injection of the multilevel inverter output

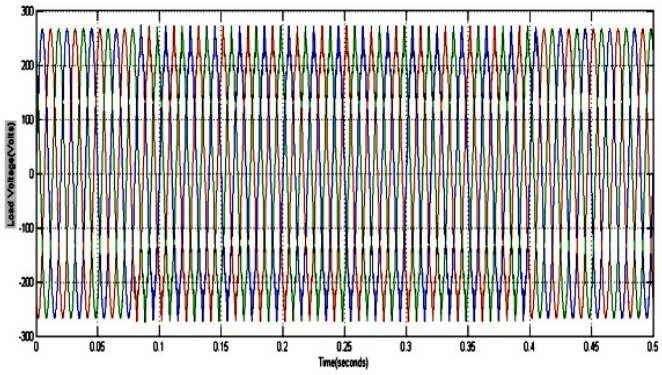

Figure 10 b. Output Load Voltage after the open loop injection of the multilevel inverter voltage.

To obtain better results in terms of compensating voltage sag, a closed loop circuit was simulated using the PI controller. Figure 11 shows the closed loop circuit for the mitigation of voltage sag. Figure 11a shows the simulink model of the circuit for closed loop mitigation. Figure 11 b shows the output load voltage before the closed loop injection of the multilevel inverter voltage. Figure 11 c shows the output load voltage after the closed loop injection of the multilevel inverter voltage.

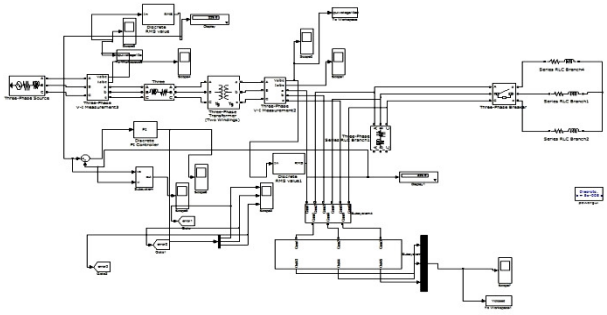

Figure 11. Closed loop circuit for the mitigation of voltage sag

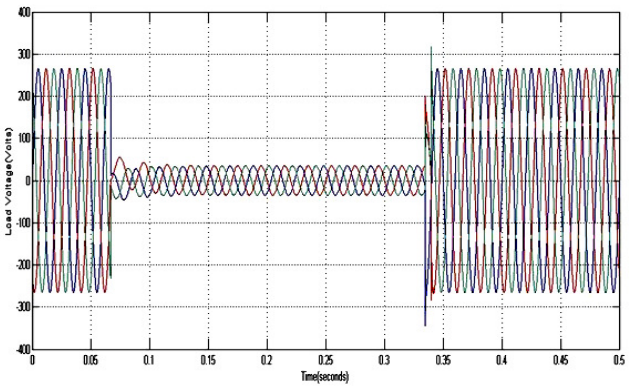

Figure 11 a.Output load voltage before the closed loop injection of the multilevel inverter voltage

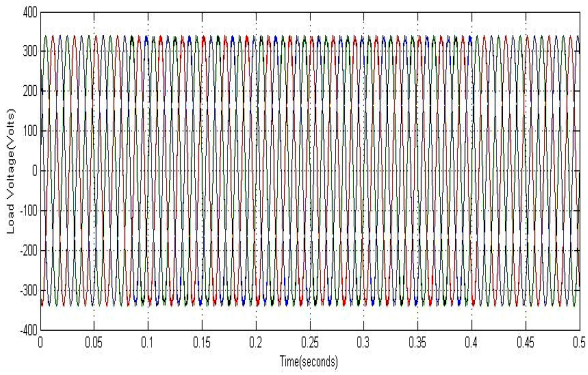

Figure 11 b.Output load voltage after the closed loop injection of the multilevel inverter voltage

The multilevel inverter was used with a rectifier fed RL load. The simulink model of the uncompensated transmission circuit is as shown in figure 12.

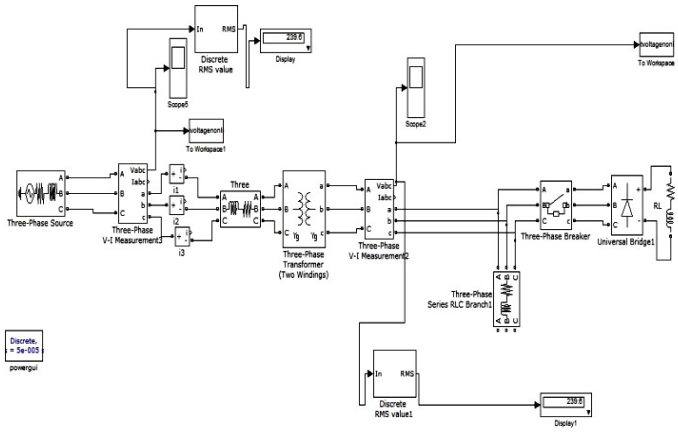

Figure 12 . Simulink model of the uncompensated circuit with rectifier fed RL load

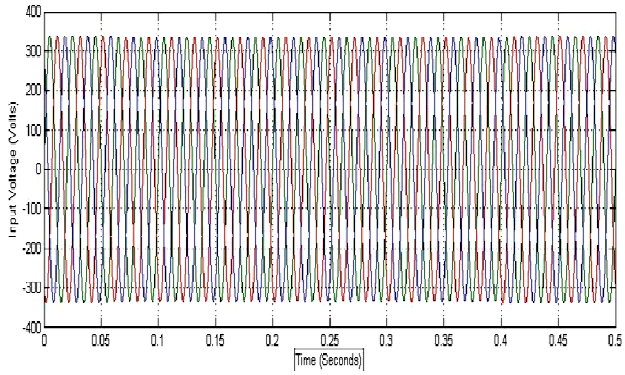

Figure 12 b. Input source voltage of the uncompensated circuit with rectifier fed RL load

It could be observed from the input source voltage that there is a dip in the source voltage when the load is a rectifier fed RL load. The THD of the source voltage is measured and found to be 0.08%. The output load voltage before compensation for a rectifier fed RL load is as shown in figure 12 c.

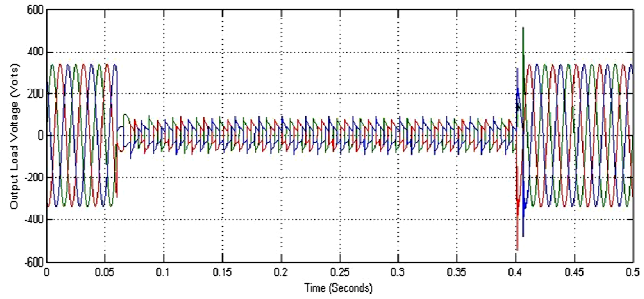

Figure 12 c. Voltage sag when the load is a rectifier fed RL load

It is observed that the load voltage before compensation is found to have a dip for the period when the load is introduced and also it contains harmonics. The THD of the load voltage was found to be 10.18%. The source voltage and the load voltage distortions are compensated using the Cross Switched multilevel inverter. The open loop injection of the inverter voltage is as shown in figure 13.

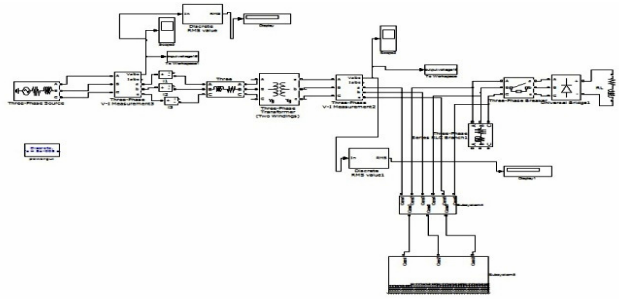

Figure 13. Open loop injection of multilevel inverter voltage for rectifier fed RL load

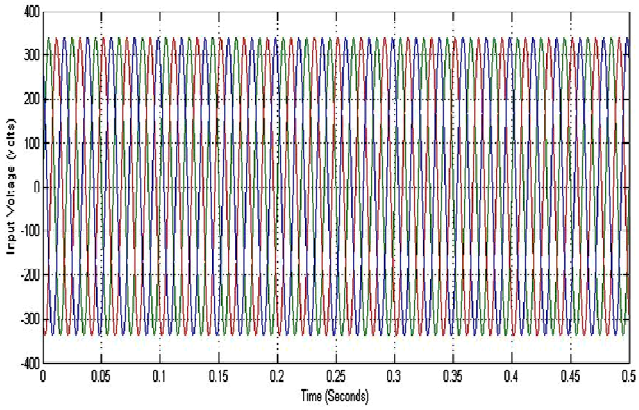

Figure 13 a. Input voltage after the injection of the multilevel inverter r

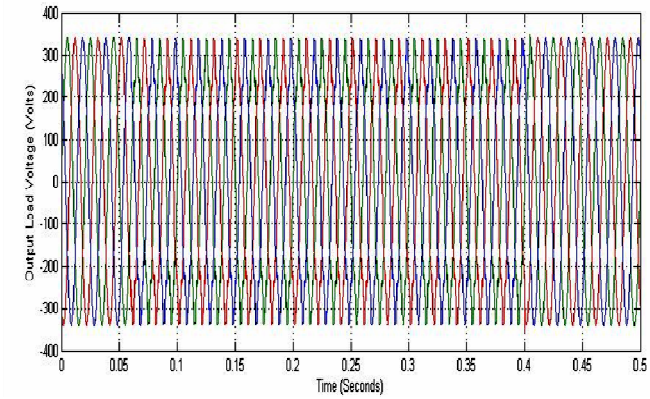

Figure 13 b. Output Load Voltage after the open loop injection of the multilevel inverter

The closed operation for injecting the multilevel inverter voltage using a PI controller is as shown in figure 14.

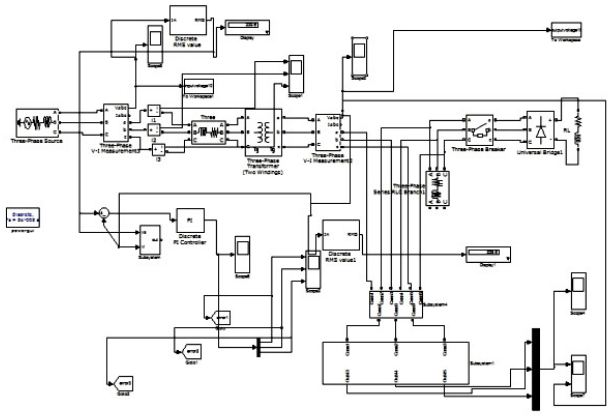

Figure 14. Closed loop injection of multilevel inverter voltage using PI controller

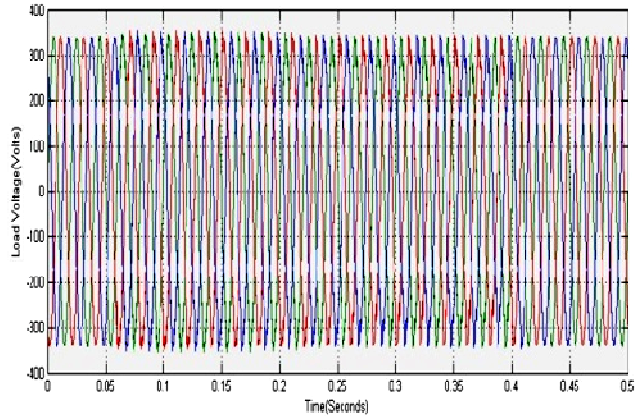

Figure 14a. Output load voltage after closed loop injection of multilevel inverter voltage using PI controller for rectifier fed RL load.

After compensation it is found that the voltage sag in the output load voltage is mitigated and the harmonics are also reduced. The THD of the output load voltage is found to be 6.10% for open loop injection and 3.76% for closed loop injection.

6. RESULTS

The single phase and three phase 11 level voltage with a peak to peak value of 310V was obtained. The THD in the output voltages of both single phase and three phase configurations were measured and found to be 37.66% for single phase configuration and 37.61% for three phase configuration. The THD in the output voltage after mitigating the voltage sag using the compensating algorithm is found to be 1.29%. The THD in the load voltage after the open loop injection of the multilevel inverter voltage is found to be 5.76% and 2.77% for the closed loop compensated load voltage. The multilevel inverter was also tested for a rectifier fed RL load transmission system. The THD in the source voltage with RMS value of 350V was measured and was found to be 0.08% giving the RMS value of load voltage as 239V.

7. CONCLUSION

Thus one of the major power quality issues – voltage sag was simulated and analyzed using MATLAB/SIMULINK and the output waveforms were obtained. Simulation of the single phase as well as the three phase configuration of the 11 level Cross Switched multilevel inverter was also done using MATLAB/SIMULINK and the corresponding 11 level ac voltages were obtained. It was possible to inject the multilevel inverter voltage during the period of voltage sag Thus a novel configuration of Cascaded H Bridge multilevel inverter was realized as a series filter and used as a DVR. The future scope of this paper can be extended to implement the use of this

multilevel inverter for compensating other power quality issues such as voltage swell.

REFERENCES

[1] Mohammad Farhadi Kangarlu, Ebrahim Babaei "Cross-switched multilevel inverter: an innovative topology", IET Power Electron., Vol. 6, Iss. 4, 2013, pp. 642–651

[2] K.N.V.Prasad, G.Ranjith Kumar, Y.S.Anil Kumar, G.Satyanarayana "Realization of 5 Level Muleilevel Inverter As a Dynamic Volasge Restorer" 2013 International Conference on Computer Communication and Informatics (ICCCI -2013), Jan. 04 – 06, 2013, pp.1-6

[3] Khajehoddin, S.A Bhakshai, A.Jain.P.K "A simple voltage balancing scheme for m-level diode clamped multilevel converterusing voltage level modulation", IET Power Electron, 2010, 57, (7), pp.2197-2206

[4] Malinowski, M., Gopakumar, K., Rodriguez, J., Perez, M.: 'A survey on cascaded multilevel inverters', IEEE Trans. Ind. Electron57, (7), 2010, pp. 2197–2206

[5] D Mohan Reddy, Dr. T.Gourimanohar "Cascaded Multilevel Inverter Based DynamicVoltage Restorer For Restructured Power Systems" International Journal of Advanced Research in Electrical, Electronics and Instrumentation Engineering Vol. 2, Issue 1, January 2013, pp. 626-632

[6] P.Surendra Babu, BV. Sanker Ram "Realisation Of Cascaded H Bridge 5 Level Multilevel Inverter As Dynamic Voltage Restorer" International Journal of Electrical and Electronics Engineering Research (IJEEER) ISSN 2250-155X Vol.2, Issue 3 1, Sep 2012 pp. 12-27

[7] P. Boonchiam, N. Mithulananthan, "Diode-clamped Multilevel Voltage SourceConverter Based on Medium Voltage DVR" International Journal of Electrical Power and Energy Systems Engineering 1;2 2008, pp. 62-67

[8] Bingsen Wang, Giri Venkataramanan, Member, IEEE, and Mahesh Illindala, Member, IEEE, "Operation and Control of a Dynamic Voltage Restorer Using Transformer Coupled H-Bridge Converters" IEEE Transaction On Power Electronics, VOL. 21, NO. 4, JULY 2006, pp. 1053-1061