Advanced Research in Electrical and Electronic Engineering
Print ISSN: 2349-5804; Online ISSN: 2349-5812 Volume 1, Number 4 (2014) pp. 14-18

http://www.krishisanskriti.org/areee.html

Hybrid Modulation Technique for High Definition Streaming

Saba Farheen N. S.[1], Fathima Bi[2]

[1]*Dept. of E&CE, P.A college of Engineering , Mangalore, Karnataka*
[2]*Dept of Mathematics, H.M.S institute of Technology, Tumkur, Karnataka*

Abstract: **The future applications in wireless digital communication targets multimedia, messaging and high speed internet access, all expressing the need for high speed accessing and modulation techniques so as to achieve high definition streaming for next generation. A novel type of high speed hybrid quadrature phase shift keying (H-QPSK) modulator and demodulator has been devised and constructed for use in digital communication link operating at giga bits per second transmission rate. The proposed H-QPSK technique gaining interest in providing reduced symbol error rate (SER) with reference to the energy-per-bit to noise power spectral density ratio (E_b/N_o). In this work a performance analysis of H-QPSK over quadrature amplitude modulator (16 QAM) has been done so as to incorporate the hybrid modulation technique in orthogonal frequency division multiple access (OFDMA) for high definition streaming in next generation.**

Keywords: **H-QPSK, SER, OFDMA**

1. INTRODUCTION

Internet has converted this world into global village. Now people want to communicate while on move. Wireless is the technology that makes it possible. In last few years, the mobile radio communication industry has grown exponentially. By the fabrication of high density low power, low noise, small size and reliable digital and RF chips make radio equipment smaller, cheaper and more reliable. Due to this explosive growth of mobile and wireless users there are so many problems created, the most critical problem is frequency spectrum, Bit Error Rate (BER) and Bandwidth. In this project the Hybrid Quadrature Phase Shift Keying is addressed as modulator and demodulator for the wireless modem.

Digital modulation is a process that impresses a digital symbol on to a signal suitable for transmission on a wired or wireless medium in order to receive that signal at receiving end correctly without any loss of information. QPSK and QAM are two well accepted modulation techniques used in OFDMA. H-QPSK the proposed hybrid modulation technique is effectively two independent QPSK systems (I and Q) and therefore exhibits the same performance but twice the bandwidth efficiency and reduced SER. The bit rate defines the rate at which the information is passed. The advantage of H-QPSK over 16QAM is most evident according to experimental results therefore it can be successfully adopted in OFDMA to achieve high definition streaming. The SER is very much reduced with reference to conventional methods in the result analysis [1].

OFDMA is one of the most favored schemes for use in broadband transmission systems. The total spectral resource is partitioned in to multiple orthogonal subcarriers [2]. These subcarriers are assigned to different users for simultaneous transmission. Other advantages of OFDMA include MIMO-friendliness and ability to provide superior quality of service (Q_oS) [3]. A prototype H-QPSK modulator and demodulator has been constructed. The performance is evaluated in Additive white Gaussian noise (AWGN) channel. The probability of bit error rate has been calculated using mathematical analysis and compared with simulation results.

2. SYSTEM IMPLEMENTATION

The Fig. 1 shows the general block diagram of the proposed technique.

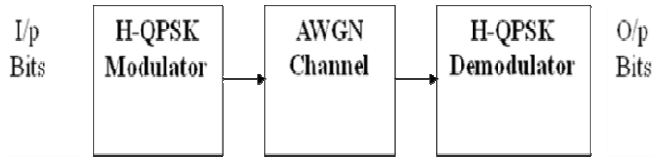

Figure. 1 Block Diagram

Input bit stream is given to H-QPSK modulator and output of the modulator is transmitted over AWGN channel and fed to the H-QPSK demodulator to obtain back the original stream.

2.1 H-QPSK Modulator

The Fig. 2 shows the H-QPSK modulator. The input bit stream is given to serial to parallel converter so that the four bits are simultaneously modulated. Two sets of QPSK are generated and orthogonally modulated, combined together to get H-QPSK.

Q_1 (t) and Q_2 (t) are the two orthogonally modulated output signals generated out of bit streams $b_1(t)$, $b_2(t)$, $b_3(t)$ and $b_4(t)$.

Mathematically,

$$Q_1(t) = b_1(t)\sin w_1(t) + b_2(t)\cos w_2(t) \ldots\ldots \quad (1)$$

$$Q_2(t) = b_3(t)\sin w_3(t) + b_4(t)\cos w_4(t) \ldots\ldots (2)$$

The output of the H-QPSK modulator is given by

$$Q_H(t) = Q_1(t)\sin w_1(t) + Q_2(t)\cos w_2(t) \ldots\ldots (3)$$

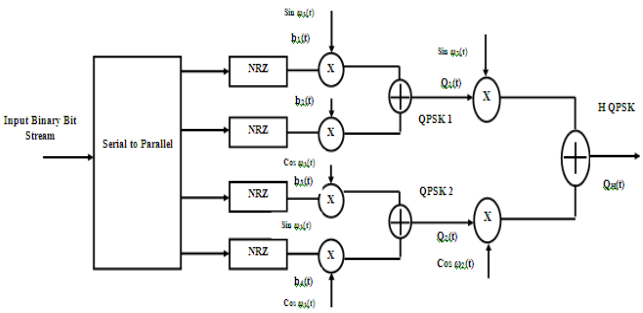

Figure 2: H-QPSK Modulator

2.2 H-QPSK Demodulator

The reverse operation is done along with the filtering and decision device to get back the original bit stream. Fig.3 shows the H-QPSK demodulator.

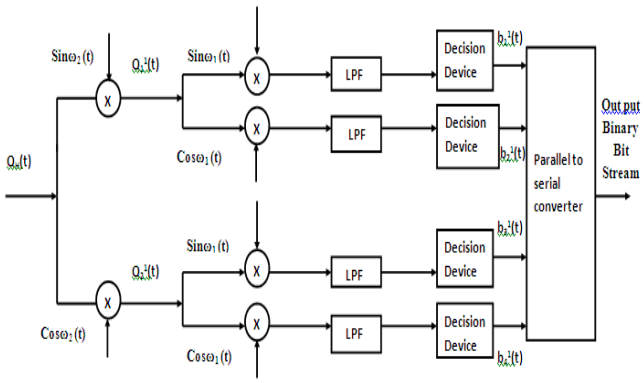

Figure 3: H-QPSK Demodulator

The outputs of the first stage of the demodulator is given by

$$Q_1'(t) = Q_H(t)\sin\omega_1(t) \ldots\ldots \quad (4)$$

$$Q_1'(t) = [\,Q_1(t)\sin\omega_2(t) + Q_2(t)\cos\omega_2(t)]\sin\omega_2(t) \quad (5)$$

$$Q_1'(t) = Q_1(t)\left[\left(\frac{1-\cos 2\omega_2(t)}{2}\right)\right] + Q_2(t)\sin\omega_2(t)\cos\omega_2(t) \quad 6)$$

By neglecting the higher frequencies in the above equation (6)

$$Q_1'(t) \approx \frac{Q_1(t)}{2} \ldots\ldots (7)$$

$$b_1'(t) = Q_1'(t)\sin\omega_1(t) \ldots\ldots (8)$$

Using (7) and (8)

$$b_1'(t) = \frac{Q_1(t)}{2}\sin\omega_1(t) \ldots\ldots (9)$$

By substituting equation (1) in (9)

$$b_1'(t) = \frac{1}{2}[\,b_1(t)\sin\omega_1(t) + b_2(t)\cos\omega_1(t)]\sin\omega_1(t) \ldots\ldots (10)$$

$$b_1'(t) = \frac{b_1(t)}{4}[(1-\cos 2\omega_1(t)] + b_2(t)\cos\omega_1(t)]\sin\omega_1(t) \ldots\ldots (11)$$

By neglecting the higher order terms the equation (11) becomes

$$b_1'(t) \approx \frac{b_1(t)}{4} \ldots\ldots (12)$$

Similarly the above equation (12) is true for $b_2'(t), b_3'(t)$ & $b_4'(t)$.Here $b_1'(t)$ $b_2'(t), b_3'(t)$ & $b_4'(t)$ are reconstructed bit stream these bits can be reshaped and converted from parallel to serial to get the original bit stream.

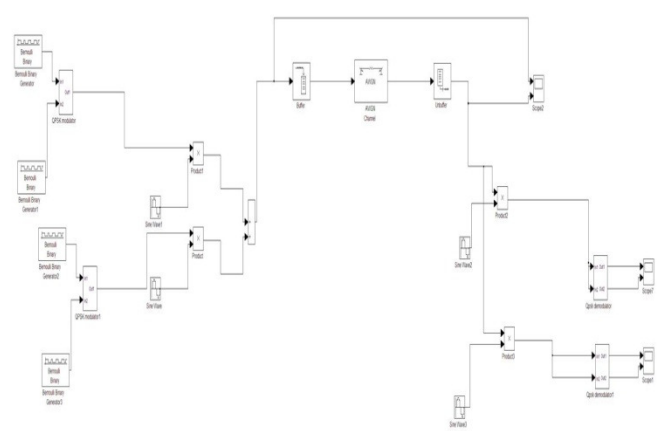

Figure 4: H-QPSK Simulink model

3. RESULTS AND DISCUSSION

The analysis of results for the proposed work is shown below.

Stage1: Input bit stream is applied to the H-QPSK modulator

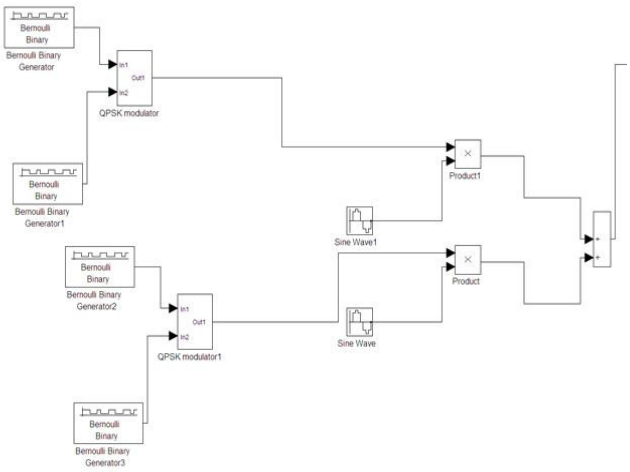

Figure 5: *H-QPSK* Simulink Modulator model

The figure above shows the H-QPSK modultor which employs a pair of QPSK modulators to modulate the I\P signal.

The modulated signal is as shown below

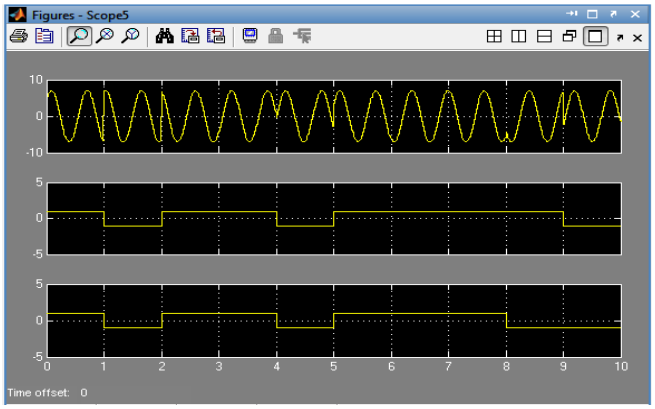

Figure 6: I\P bit stream & Modulated output across QPSK-1

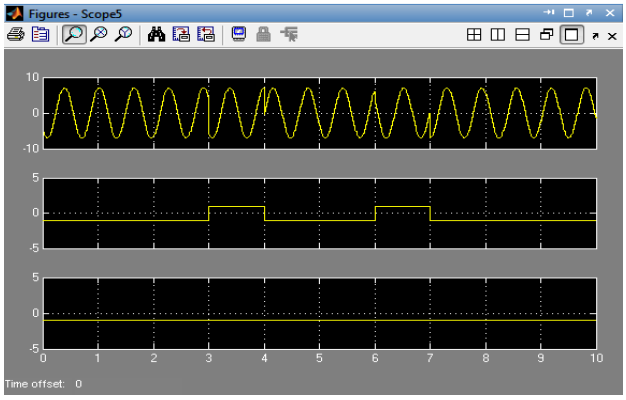

Figure 7: I\P bit stream & Modulated output across QPSK-2

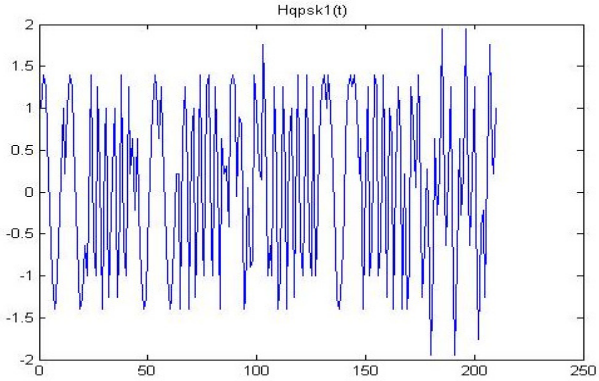

Figure 8: H-QPSK modulated waveform for the given input bit stream

Modulated signal is passed through an AWGN channel

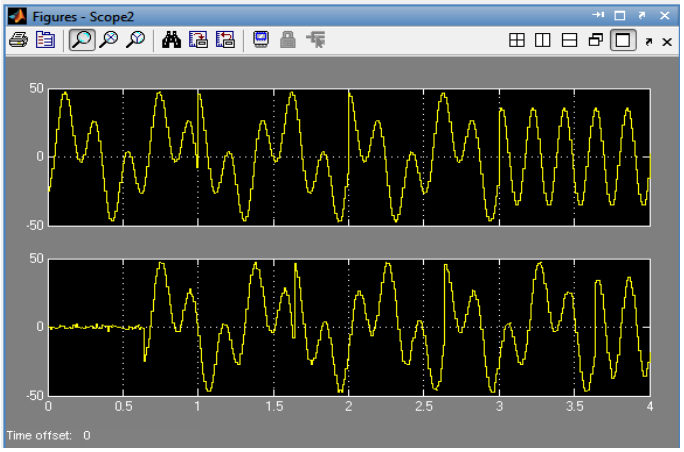

Figure 9: H-QPSK after passing from AWGN channel

Stage 2: Modulated signal is applied as I\p to H-QPSK Demodulator

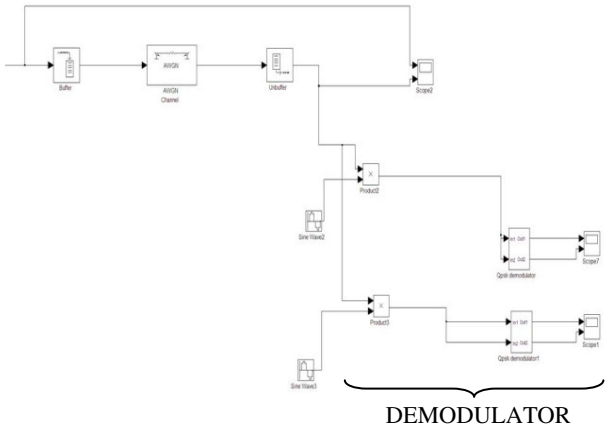

Figure 10: H-QPSK Demodulator

The figure above shows the AWGN channel followed by the H-QPSK demodultor which employs a pair of QPSK demodulators to recover the I\P signal.

Demodulated signals are as shown in the figures below

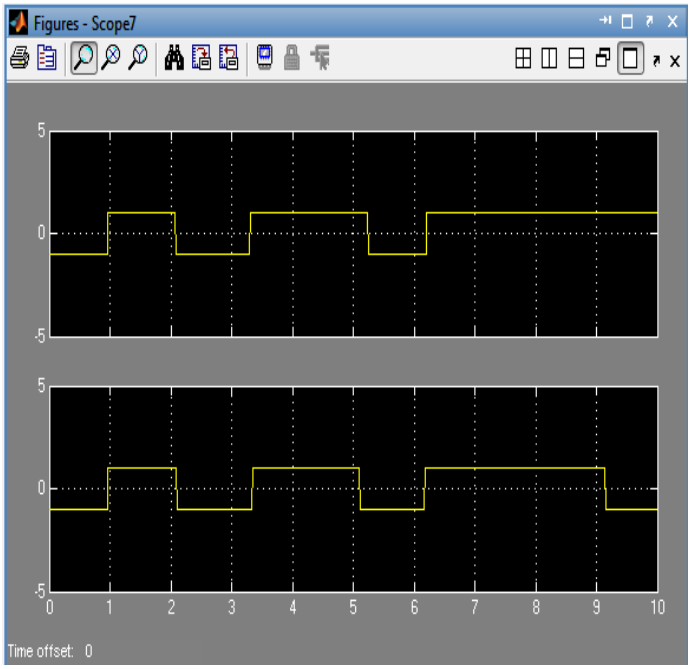

Figure 11: Demodulated O\P-1

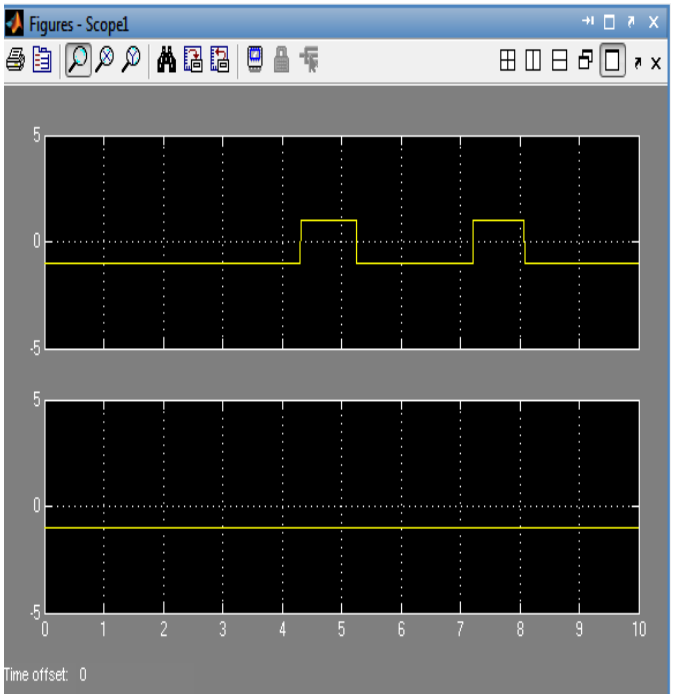

Figure 12: Demodulated O\P-1

A comparative analysis of SER for 16QAM over H-QPSK has done. Mathematical and simulation results are analyzed in fig. 13 and fig. 14

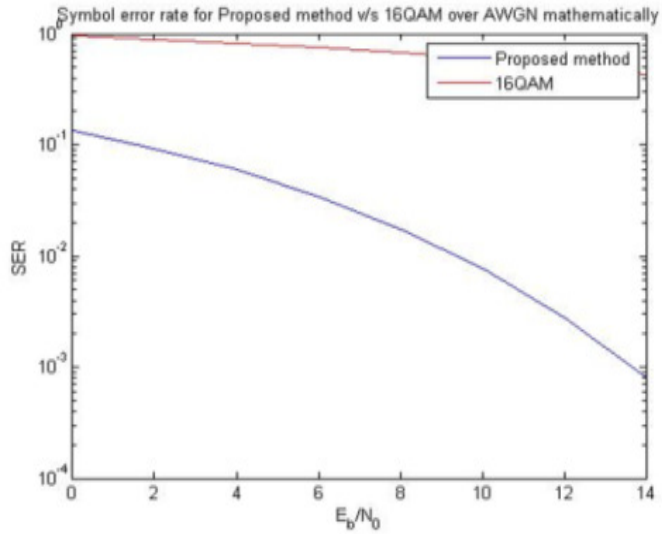

Figure 13: SER for proposed method vs. 16QAM over AWGN mathematically

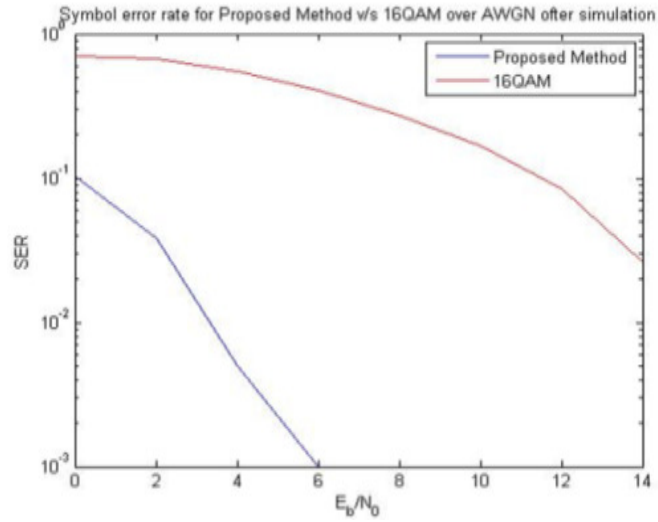

Figure 14: SER for proposed method vs. 16QAM over AWGN after Simulation

4. CONCLUSION

H-QPSK modulator and demodulator have been constructed to meet the challenges of high definition streaming. The proposed H-QPSK has provided the reduced SER over 16-QAM. The proposed method not only reduces the complexity but also gives reduced probability error. The performance analysis simulation results with mathematical calculation has been done and results are evaluated.

REFERENCES

[1] Ralph Trambarulo. "High-speed QPSK modulator and demodulator with sub harmonic pumping", in *IEEE Transactions on Microwave Theory and Techniques, Vol.36, No.12, Dec 2009*.

[2] H.S. Kim et al. "Efficient subcarrier and bit allocation algorithm for OFDMA system with adaptive modulation", in *Proc IEEE VTC 2008 spring, 2008.*

[3] In-Soon Park, Young-Ho Jungt, Inhyoung Kim$, Yong H.Lee. "Dynamic Sub channel and Bit allocation in multiuser MIMO/OFDMA Systems, in *IEEE 2010*.

[4] Krishna Sankar. "Symbol Error rate (SER) for 16-QAM". *Dec 9, 2007.*

[5] Daniel Santana Gomez, i. A. Aguirre-hernández, y. L. Rodríguez-guarneros, javier eduardo gonzález villarruel, "PSK Digtial Modulation DSP Implmentation Applied To software Radio", in *Proceedings of the Electronic, Robotics and Automotive Mechanics Conference (CERMA'06), IEEE Computer Society.*

[6] Rakesh Sambaraju, OSA, Miguel Ángel Piqueras, Valentín Polo, Juan L. Corral, and Javier Martí, " Generation of Multi-GigaBit Per Second MQAM/MPSK-Modulated Millimeter Wave Carriers Employing Photonic Vector Modulator Techniques", *in journal of light wave technology, vol.25, No. 11, November, 2007.*

[7] Douglas L. Jones, Swaroop Appadwedula, Matthew Berry, Mark Haun, Jake Janovetz, Michael Kramer, Dima Moussa, Daniel Sachs, Brian Wade, "Digital Transmitter: Introduction to Quadrature Phase-Shift Keying", in *Connexions module: m10042, Version 2.19: Feb 25, 200411:59 am US/Central.*

[8] "All About Modulation", Copyright 2002 Charan Langton, revised Dec 2005, WWW.COMPLEXTOREAL.COM